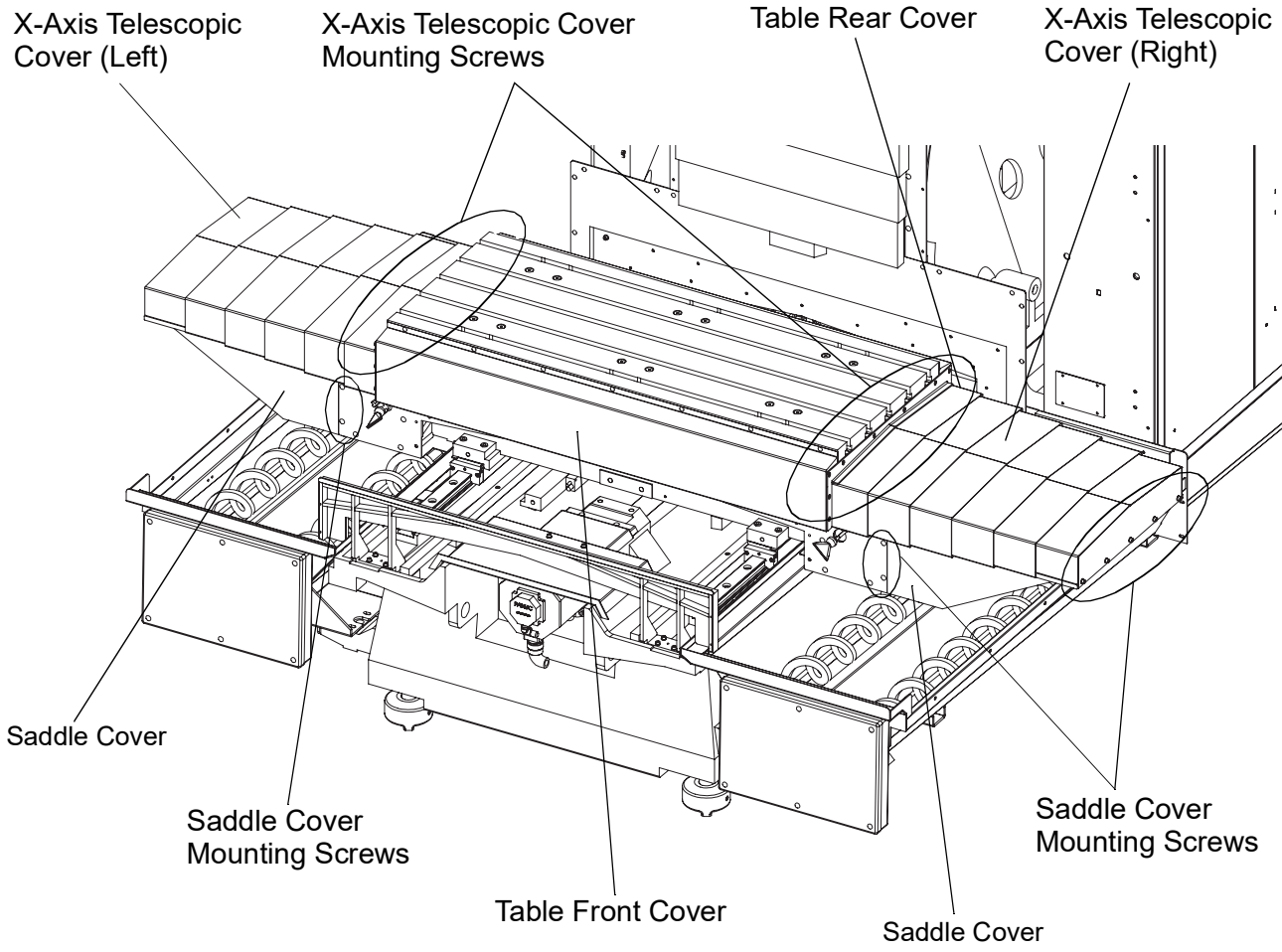
X-Axis Telescopic Cover (Left)
X-Axis Telescopic Cover Mounting Screws
Table Rear Cover
X-Axis Telescopic Cover (Right)
Saddle Cover
Saddle Cover Mounting Screws
Table Front Cover
Saddle Cover
Saddle Cover Mounting Screws